smartoptics

SO-XFP-ZR-Dxxxx

10 Gb/s XFP DWDM Transceiver

INTRODUCTION

The SO-XFP-ER-Dxxxx is an optical transceiver module for high-speed, 10Gbit/s data transmission applications. The module is fully compliant to IEEE 802.3ae standard for Ethernet and the 10GFC Rev. 4 Fiber Channel standard, making it ideally suited for 10 GbE telecom, datacom and storage area network (SAN / NAS). Designed for distances of up to 80km the transceiver module comprises a DWDM DFB transmitter with an externally modulated laser (DFB-EA) and a receiver with an APD photodiode. The transceiver operates within a wide temperature range of 0°C to +70°C and offers optimum heat dissipation and excellent electromagnetic shielding. The transceiver is fully compliant to the XFP MSA Rev. 4.5.

DWDM modules operate at Dense Wavelength Division Multiplexing (DWDM) wavelengths. There are 40 wavelengths available from 1530.33 nm – 1560.61 nm in a 100 GHz (~0.8 nm) channel spacing. The DWDM characteristics are fully compliant to the wavelength parameters specified in ITU standards G.692 and G.694.1

APPLICATIONS

- IEEE 802.3ae 10GBASE-ZR 10.3125 Gb/s
- DWDM Metro Systems
- Regional Networking
- IP Core Networks

FEATURES

- Compatible with XFP MSA Rev. 4.5
- 40 DWDM lambdas (l): 1530.33 nm – 1560.61 nm
- Compliant to IEEE 802.3ae 10GBASE-ER at 10.3125 Gbit/s
- Up to 80 km transmission on 9/125 µm SMF G.652
- 24 dB link budget
- Hot pluggable 30 pin connector
- DFB-EA laser
- Duplex LC-connector interface
- Compliant with the EU RoHS 6 Environmental Requirements

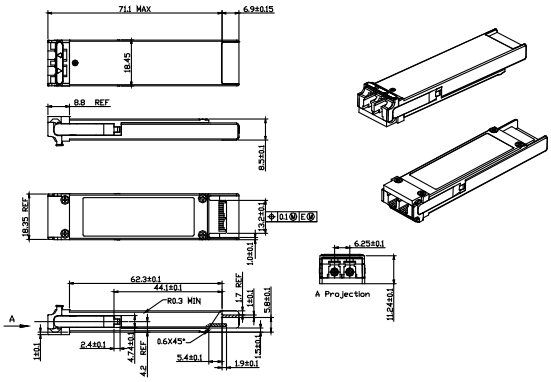

Specification subject to change without notice.

LASER SAFETY

This optical transceiver is a Class 1M laser product. It complies with IEC-60825 and FDA 21 CFR 1040.10 and 1040.11. The transceiver must be operated within the specified temperature and voltage limits. The optical ports of the module need to be terminated with an optical connector or with a dust plug.

Ordering Information:

Part no:	Description/Application
SO-XFP-ZR-Dxxxx *	XFP, 10GBase-ZR, 10.3125 Gbps, DWDM, SM, DDM, 24dB, 80km

* xxxx = 9180 ~ 9610:
1563.05 nm = 191.80 THz = 9180
1530.33 nm = 195.90 THz = 9590

Optical Parameters:

Part no.\Parameter	Wavelength [nm]	Opt. Output Power [dBm]	Opt. Receiver Sensitivity [dBm]	Power Budget [dB]
SO-XFP-ZR-Dxxxx	DWDM	0 to +4	-24 to -7	24 dB

When shorter distances of optical fiber are used, an attenuator must be used to avoid overloading and damage to the optical APD receiver.

SmartOptics AS
Phone: +47 213 79 180
Mail: info@smartoptics.com
www.smartoptics.com